NOTES:

1) OPERATION TYPE MAY BE PUSH-UP, HAND CHAIN OR ELECTRIC.
2) CLEARANCES SHOWN ARE MAXIMUMS. LESSER CLEARANCES MAY BE POSSIBLE.
3) UNLESS OTHERWISE NOTED, DOORS SHALL BE PROVIDED WITH SLIDE LOCKS AT EACH END OF BOTTOM BAR, ENGAGING GUIDES IN THE LOCKED POSITION.
4) ALL OPENING PREPARATION, ELECTRICAL POWER AND FIELD PAINTING SHALL BE PROVIDED BY OTHERS.
5) SERIES 5536I IS AN INSULATED SERIES 5536.
6) CURTAIN FINISH SHALL BE SILICONE POLYESTER PRE-PAINT OVER GALVANIZED GRADE 80 STEEL.
7) GUIDES, BRACKETS, BOTTOM BAR ANGLE AND HEAD STOPS ARE ZINC COATED.

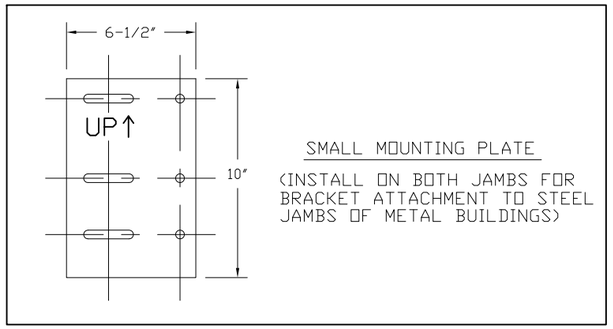

SMALL MOUNTING PLATE

(INSTALL ON BOTH JAMBS FOR BRACKET ATTACHMENT TO STEEL JAMBS OF METAL BUILDINGS)

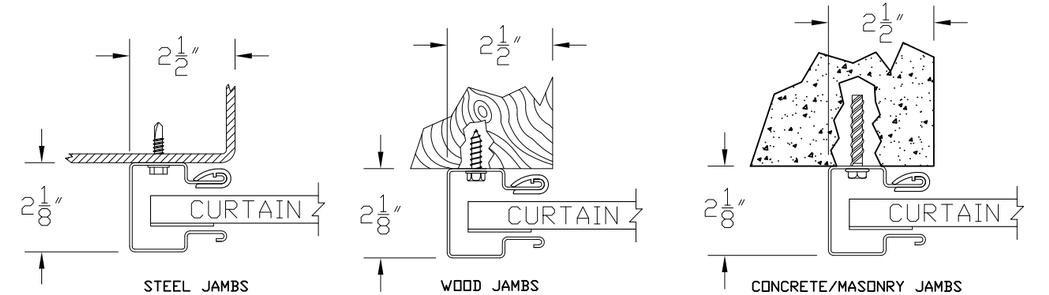

STEEL JAMBS (USING 1/4-14 X 1" TEKS)

WOOD JAMBS (USING 1/4-10 X 1" LAG)

CONCRETE/MASONRY JAMBS (USING 1/4" X 1-3/4" POWERS WEDGE BOLT)

16 GA GUIDE MOUNTING DETAIL

BRACKET ATTACHMENT

CONCRETE/MASONRY: POWERS WEDGE-BOLT, 3/8 X 1-3/4" LONG
WOOD: LAG SCREW, 3/8-7 X 3" LONG
STEEL: HEX BOLT, GR.5, 3/8-16 X 1-1/4" LONG

(*) FOR PUSH-UP OPERATION: 4-1/8"
FOR HAND CHAIN OPERATION: 5-1/2"
FOR ELECTRIC OPERATION: 5-5/8"
FOR OUTSIDE OF CHAIN DRIVE: 7"
NOTE: RIGHT SIDE DRIVE SHOWN

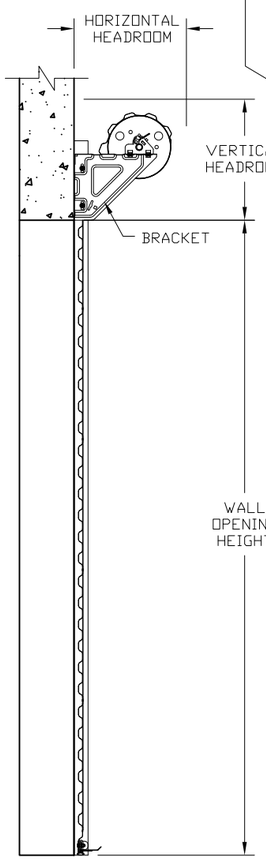

END VIEW

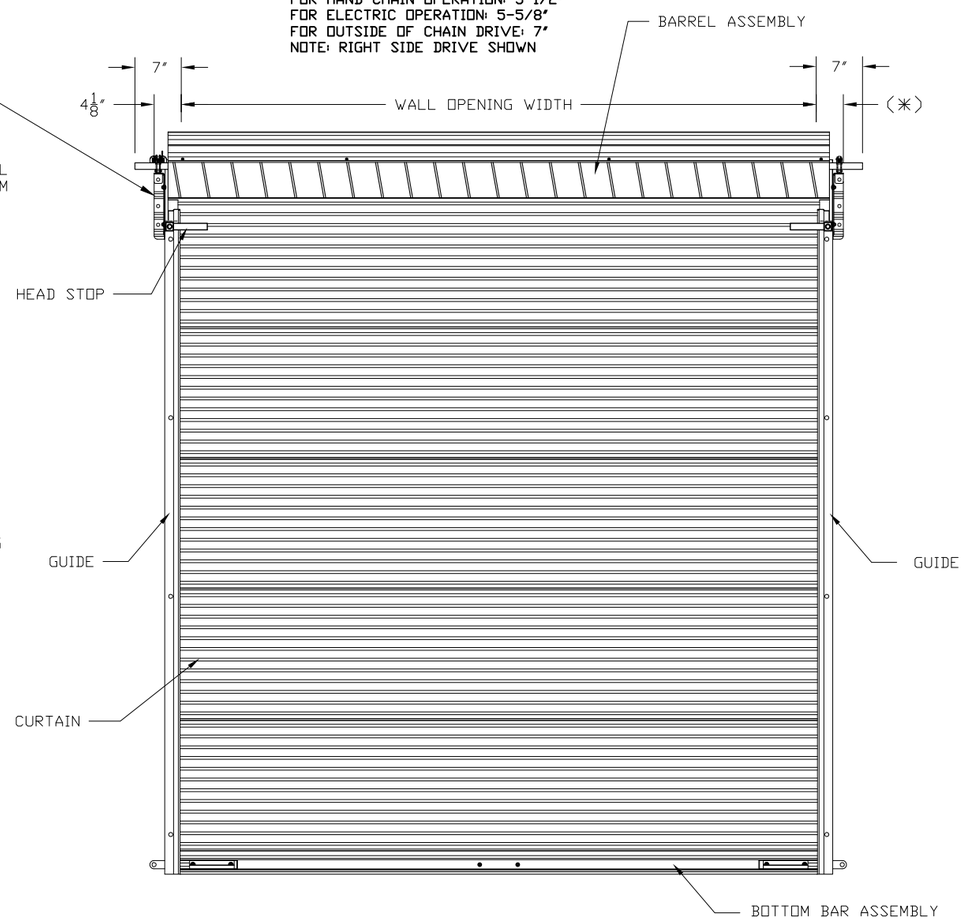

INSIDE ELEVATION

HEADROOM REQUIRED

OPENING HEIGHT	VERTICAL HEADROOM	HORIZONTAL HEADROOM
THRU 8'-0"	16"	18"
OVER 8'-0" THRU 10'-0"	18"	20"
OVER 10'-0" THRU 14'-0"	19"	21"
OVER 14'-0" THRU 16'-0"	20"	22"
OVER 16'-0" THRU 18'-0"	21"	23"
OVER 18'-0" THRU 20'-0"	22"	24"

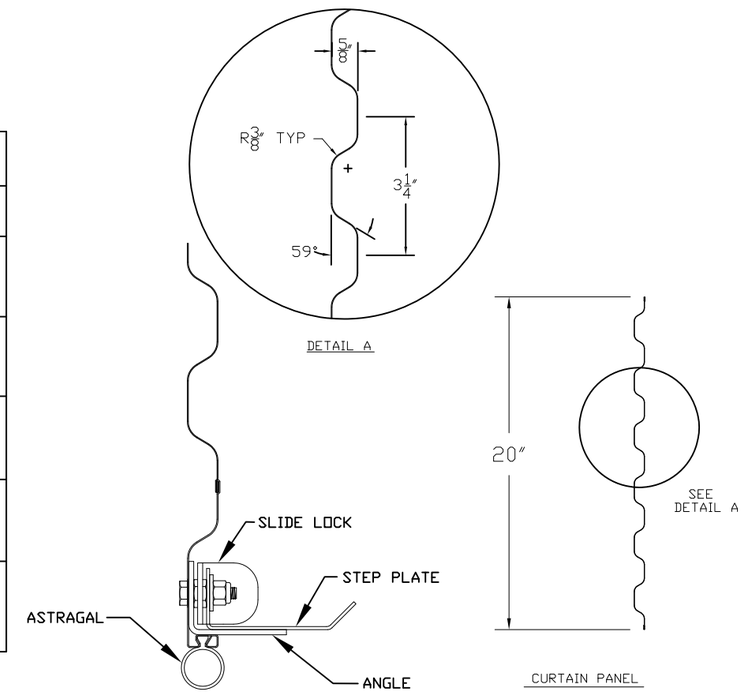

BOTTOM BAR ASSEMBLY

CURTAIN PANEL
26 GA CURTAIN DETAIL

4-6-10

FACTORY ORDER NUMBER	DOOR SERIES		QTY	OPENING SIZE		JAMB TYPE			OUTSIDE CURTAIN COLOR	OPERATION			OPERATION HAND	WEATHERSTRIP			ADDED OPTIONS
	5536	5536I		WIDTH	HEIGHT	STEEL	CONC./ MAS.	WOOD		PUSH UP	REDUCED CHAIN	ELECTRIC		TOP	HEADER	SIDE	

MODEL 5536/5536I

CUSTOMER NUMBER:		DATE:	
CUSTOMER NAME:		CONTACT:	
PROJECT NAME:			
PROJECT LOCATION:			
PLANT:		SALESPERSON:	
DRAWN BY:	DATE:		
DRAWING NUMBER:	SHT:	OF:	

Amarr GARAGE DOORS
WINSTON - SALEM N.C.
336.744.5100 - 800.503.DOOR